el·watch

Neuron THS Tyre Health Sensor (TPMS)

Neuron Tyre Health System (THS), is a new way to monitor, analyse and manage the tyre health of large vehicles. This solution improves fuel economy and reduces emissions and microplastics pollution, enhance road safety, increase the lifetime of tyres and decrease the downtime of trucks and trailers.

Features and benefits

- Online – Warning to both driver and fleet manager. Real-time temperature and pressure monitoring.
- Monitor entire fleet of trucks, trailers and buses. Predict and plan maintenance.
- Easy and efficient installation. Magnetic fixing, no need for glue.
- Up to 5 years of battery life* Easy to re-use in new tyre.
- Early warning of slow-leaks. Prevents unwanted stops and tyre explosions.
- Approved for use on ADR vehicles. Enhanced safety transporting dangerous goods.

**Calculated at normal use and temperatures*

Essentials

Measuring Range	0-25 bar
Measuring Frequency	Every 10 sec
Report Frequency	Every 2 min
Expected Operating Time*	Up to 5 years

**Calculated at normal use and temperatures*

Typical Applications

- Timber transport
- Heavy haulage
- Other long distance transport with heavy load, where tyre pressure is cruicial.

General Description

Real-time, online monitoring provides a wide range of benefits compared to standard TPMS solutions. Neuron THS monitors the tyre health of large vehicles continuously. Warning by email, app notification and LED indicator if deflation occurs, not only when driving but also when the vehicle is parked.

The system collect and analyse tyre health data from your entire fleet to reduce wear and cost of tyres and fuel consumption. You can easily handle change of trailer and tyres in the app on your smart phone or on web, and compare tyre performance brand by brand. THS detects defects in wheel alignment and brakes, and helps you to plan maintenance and decrease downtime.

Due to our unique Tap & Tell solution, THS is extremely quick and easy to install.

The system consists of:

- A sensor for each tyre that is fitted inside the wheel
- A gateway communicates wirelessly with each sensor*
- LED Indicator to be placed in cab
- An ambient sensor with bracket
- Cable (14 meters) for power supply
- App and web access for monitoring

** Some trailers may require a separate gateway to achieve full coverage of all sensors. There is no additional license cost for additional gateways.*

Principle of Operation

The sensors communicate with a gateway placed underneath the vehicle, that transmits the measurement data over the cellular network to the cloud where the data is stored and accessible for the user. Normally the sensors measure every 10 second and transmit data every other minute. If the pressure should drop more than 0.2 bars within 10 second, the sensor will transmit immediately, and the reading will be pushed through the gateway instantly.
The gateway is fitted with an eSIM with automatic roaming. This means that the gateway automatically chooses the best cellular network in the area ensuring excellent cellular connection at all time.

The symbol ⚠ on the product label refers to this data sheet for important information regarding intended use, requirements for the operating environment etc. If the equipment is used in a manner not specified by El-Watch, the protection provided by the equipment may be impaired.

Technical Specification

Operational Specification

Neuron THS Sensor

Measuring Range	0 - 25 bar
Measuring Range Temperature	-40 – 105°C
Resolution	0.1 bar / 1 °C
Measuring Frequency	Every 10 sec
Report Frequency	Reports every 2 min
Operating Environment	Temperature: -40 - 125 °C Relative humidity: 0-100% Altitude < 2000m above sea level Pollution degree 4
IP-grade	IP67
Cleaning	Wipe clean with a damp cloth
Radio Frequency	863-870 MHz
Battery Type	Li-SOCl2, 3.6V
Expected Operation Time*	Up to 5 years

**Calculated at normal use and temperatures*

Neuron THS Gateway

Operating voltage	10-32 VDC, Max. 5W
Operating Environment	Temperature: -40 - 75 °C Relative humidity: 0-100% Altitude < 2000m above sea level Pollution degree 4 IP67, wet conditions.
Radio Frequency	863-870 MHz

Physical Specification

	Neuron THS Sensor	Neuron THS Gateway
Materials	Polyuretan / Neodymium magnet	Nylon 6/6
Dimensions	DxH : 36x26 mm	LxWxH: 131 x 115 x 33mm

Ordering Information

	868MHz Europe/The Middle East/Africa Part number
Neuron ADR Startkit incl. 6 tyre sensors	422255
THS ADR Sensor, comes in 2 pack	422254

Subscription

1 year subscription	ELW422301
2 year subscription	ELW422302
3 year subscription	ELW422303
4 year subscription	ELW422304
5 year subscription	ELW422305

Accessories/Spare parts

THS Gateway	421940
THS bracket for Gateway	422206
THS bracket for ambient sensor	422203
THS Pigtail 14m	421969
THS Rubber Socket	422522
THS Dashboard LED	422205

Regulatory

Certifications	Directives/Standard
CE UKCA	RED 2014/53/EU Radio
ADR	EN 60079-0:2012/A11:2013 and EN 60079-11:2012
ECE TYPE-APPROVAL	

Installation

The sensors are equiped with a magnet that fix the sensor to the cord inside the tyre. This means that when retrofitting the sensor, the tyre does not need to be taken of the rim, just push the tyre in at one side and the sensor is easily placed inside. This also means that the sensor can easily be moved to a new tyre when change is needed. We recommend to use the THS Rubber Socket to fix the sensor inside the tyre for high speed/high load applications

For quick and easy registration of sensors, El-Watch has developed the Tap & Tell solution. Use the app to activate the Tap & Tell mode, then hit the tyre gently with a hammer. The sensor detects the impact and it is registered in correct position on the vehicle.

This implies that the sensors may be fitted inside the tyre prior to mounting it on the vehicle and there will be no confusion about which sensor is in which tyre. This also simplifies the change between summer and winter tyres.

For installation manuals and videos, please visit our website, el-watch.com

Dimensions

Neuron THS Sensor

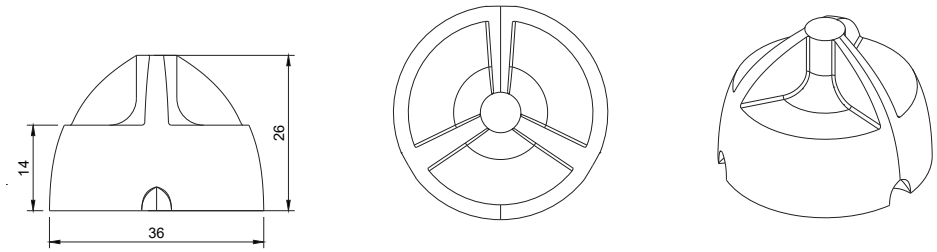

Neuron THS Gateway

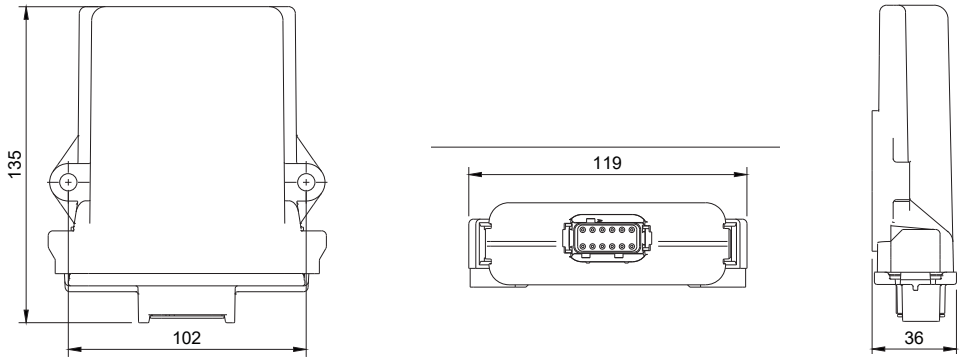

El-Watch AS • Rindalsvegen 6 • 6657 Rindal • (+47) 71 66 69 08
2022 - All rights reserved

Additional information about Neuron sensors, installation, userguides, and more at our support website: support.el-watch.com